ITECH
YOUR POWER TESTING SOLUTION

SETUP
ELECTRÓNICA

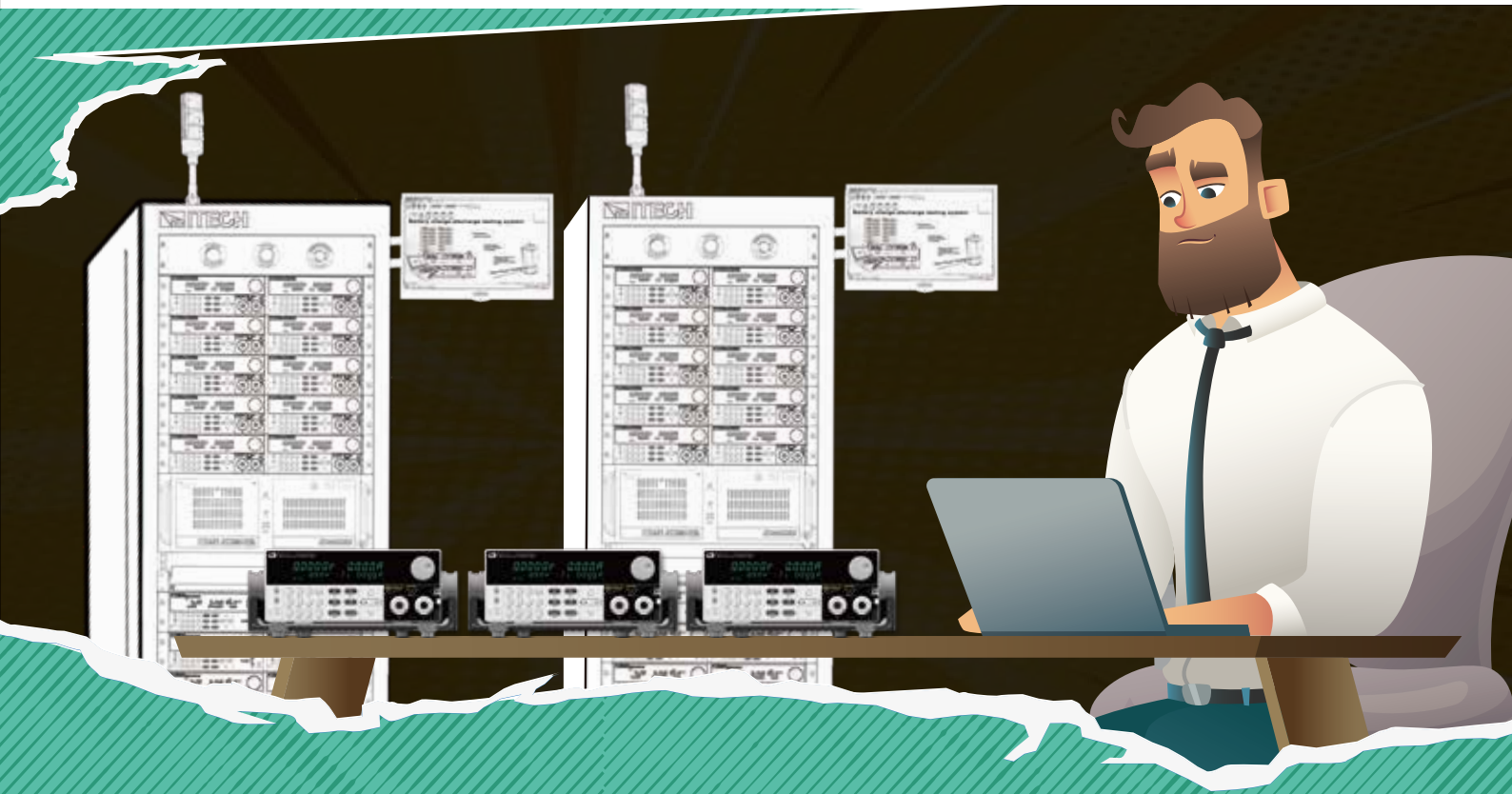

IT8500G+ series
Programmable DC Electronic Load

APPLICATIONS

- Battery test
- Lithium battery protection board test
- Power supply test
- Charger test
- Component test
- ATE

Your Power Testing Solution

IT8500G+ series Programmable DC Electronic Load

IT8500G+ series programmable electronic load is not only a desktop power supply, but also suitable for system integration. It is specially designed for fast charging adapters, power banks, industrial power modules, power electronic device R&D and burn-in testing. It not only has the traditional CC/CV/CR/CP load mode, but also provide compound modes such as CR+CC/CV+CC/CR-LED, which are widely applicable to DUTs with different characteristics. So it performs well in limiting current overshoot and dynamic loading. Not only that, the multi-channel mode and ripple measurement mode of IT8500G+ help to reduce test cost and improve test efficiency. Without additional oscilloscope and communication interface, you can easily realize the program control of hundreds of channels.

FEATURE

- 7 operating modes: CC/CV/CR/CW/CR+CC/CV+CC/CR-LED
- Built-in voltage and current ripple measurement functions
- Built in 8 fast charging communication protocol, including QC2.0, QC3.0, PE+, PE2.0+, USB PD2.0, USB,PD3.0, FCP, SCP *1
- Dynamic mode up to 20kHz
- Voltage measurement resolution up to 0.1mV / 0.1mA
- Multi-channel, up to 16 units can be connected
- OCP/OPP, battery discharge mode
- Auto test, LIST mode, short circuit mode
- Measure function, can measure the voltage rise/fall time
- Monitor 0-100% current at 0-10V (I-monitor)
- Built-in USB/LAN communication interface *2

*1 Only available with IT8511G+

*2 150W model with built-in USB interface

Model	Parameter			Accessories		
	Voltage	Current	Power	Fast charge card IT-E164	USB	LAN
IT8511G+	150V	30A	150W	Optional	Standard	/
IT8512G+	150V	30A	300W	/	Standard	Standard
IT8512BG+	600V	15A	300W	/	Standard	Standard
IT8513G+	150V	120A	600W	/	Standard	Standard
IT8513BG+	600V	20A	600W	/	Standard	Standard
IT8513CG+	40V	200A	600W	/	Standard	Standard

Application

Battery test	Lithium battery protection board test	Power bank test	Charger test	Components test	ATE

7 working mode

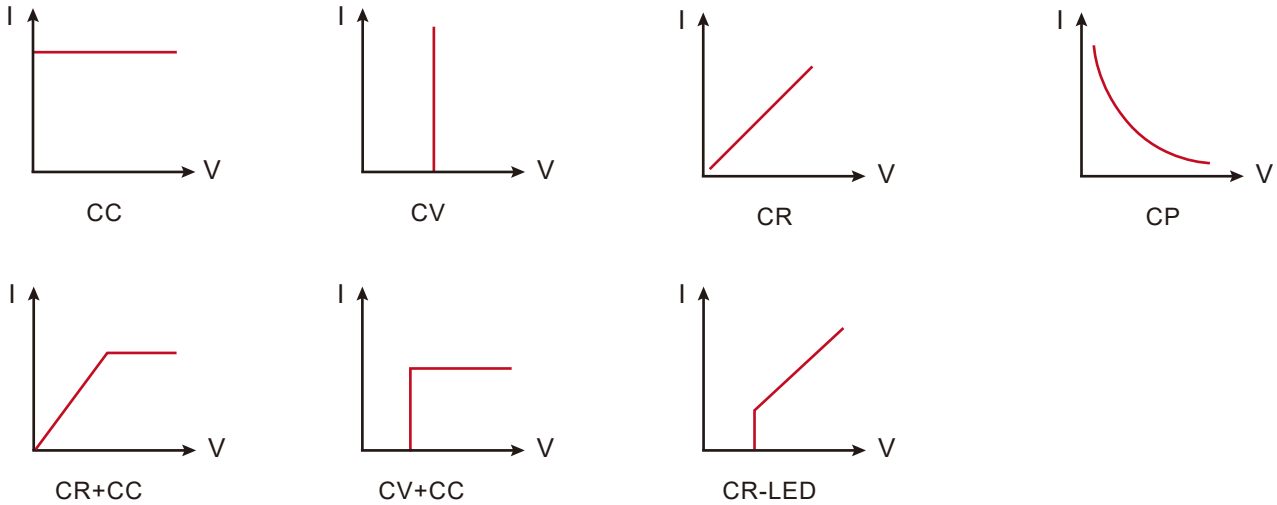

Voltage/current ripple measurement

Ripple is one of the parameters that must be tested for switching power supplies. Excessive ripple may cause interference to the DUT or shorten the life of the DUT. IT8500G+ has a ripple measurement function, and its measurement bandwidth is up to 300kHz, which meets the ripple measurement requirements of switching power supplies or chargers. At the same time, its remote sense function can help to eliminate the impact caused by the voltage drop on the line. No oscilloscope needed, users can just press the 'down' button on the front panel to read the voltage ripple value (Vp-p/Vp+/Vp-) and current ripple value (Ipp/Ip+/Ip-) of the DUT directly. This greatly simplifies the wiring and operation process.

Your Power Testing Solution

IT8500G+ series Programmable DC Electronic Load

Built-in multiple fast charge protocol

The consumption of battery power is getting faster and faster due to more and more functions generated in mobile phone. Fast charging technology can help to improve user experience under the situation. IT8500G+ has built-in multiple fast charging protocols (QC2.0, QC3.0, PE+, PE2.0+, USB PD2.0,USB PD3.0, F CP, SCP) which can complete the test for adapters with different protocols. Users can quickly choose the charging protocol on the menu. And in automatic test mode, it can realize the performance verification of the fast charging adapter under different charging process, like no-load voltage, short-circuit current, constant voltage and constant current.

* Only available with IT8511G+

Battery discharge test

IT8500G+ can perform battery discharge test in CC mode. After selecting the discharge test mode, set the turn off conditions "off voltage", "off capacity" and "discharge time". When any one of the above conditions is met during the test, the discharge stops and the electronic load automatically switches to the OFF state. During the test, the battery voltage, time and battery discharged capacity can be acquired.

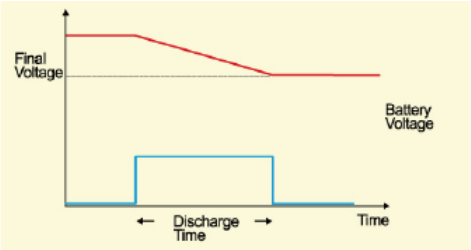

Battery discharge function

Dynamic mode

Dynamic testing means that the electronic load can be switched between two set parameters according to the set rules. This function is used to test the dynamic characteristics of power supplies.

- **Continuous transient operation**
  In the continuous mode, when the dynamic test operation is enabled, it will continuously switch between value A and value B.

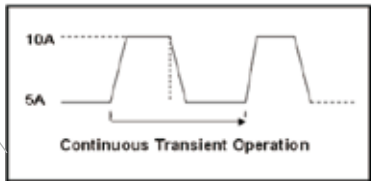

- **Pulsed transient operation**
  In the pulse mode, when the dynamic test operation is enabled, each time a trigger signal is received, it will switch to value B. After maintaining pulse width time B, it will switch back to value A.

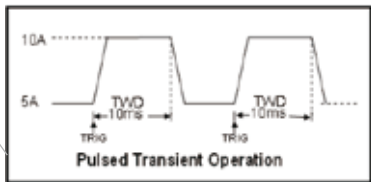

- **Toggled transient operation**
  In the toggled transient mode, when the dynamic test operation is enabled, it will switch between value A and value B every time a trigger signal is received.

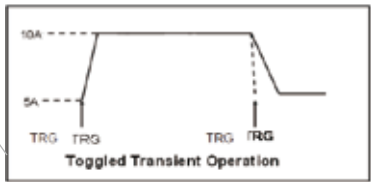

OCP/OPP

The IT8500G+ has over-power protection (OPP) and over-current protection (OCP) test function. Take the OPP test mode for example, when the input voltage reaches Von value, it will delay for a period of time, and then start to work. It will increase by a step value at regular intervals. At the same time, detect and evaluate whether the input voltage of the electronic load is higher than the OPP voltage. If it is, go down and continue to delay increment according to the cut-off power value until it reaches the cut-off power. Judge by voltage value first, and then power value according to the set power value range.

Remote measurement

In the CC/CV/CR/CP mode, when the electronic load consumes a large current, a large voltage drop will be generated on the connection line between the DUT and the load terminal. In order to keep the measurement accuracy, the electronic load provides a remote measurement terminal on the rear panel, and the user can use this terminal to measure the output terminal voltage of the DUT.

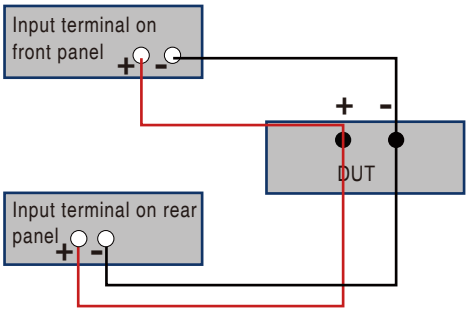

Multi-channel

The multi-channel mode of IT8500G+ is specially designed for optimizing system integration. Through this mode, it can easily build hardware platforms with dozens or even hundreds of channels. It simplifies communication connections. There is no need to purchase expensive communication modules or communication interface expansion cards (such as USB hub, multi-serial card or switch), which greatly saves test costs. The multi-channel mode of IT8500G+ allows up to 16 units connections. This means that only one communication line is required to connect to the PC for every 16 electronic loads. Let us take the 60-channel burn-in test as an example, if you use the multi-channel mode of IT8500G+, it can save the cost of 8 expansion switches, which presents you an more efficient ATE solution.

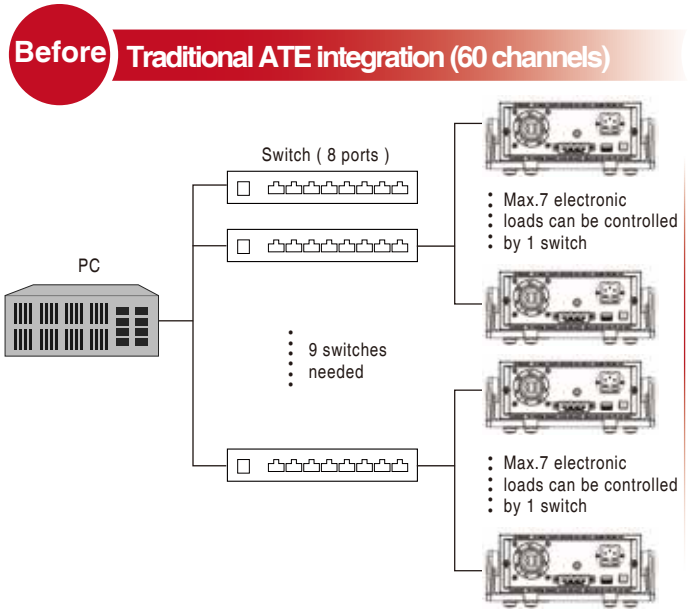

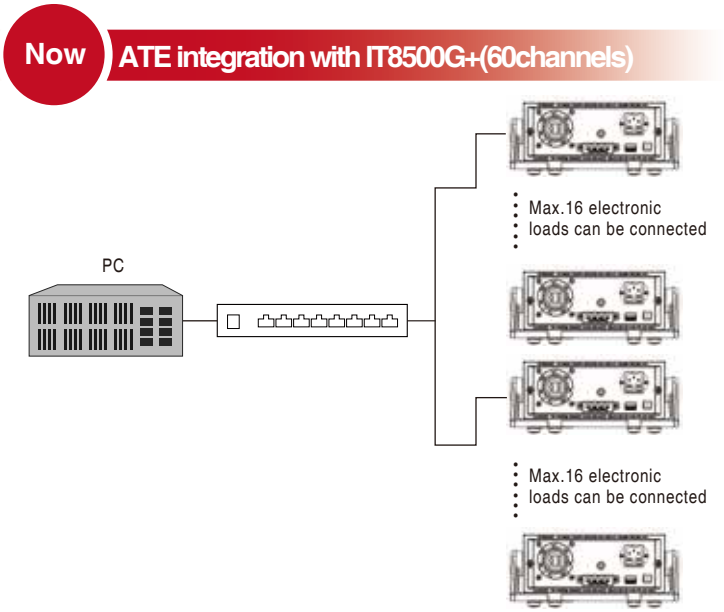

Traditional solution: To control 60 channels electronic loads, you need extra 9 switches.

Solution with IT8500G+: only 1 switch needed to control 60 channels electronic loads. With multi-channel commands, it can shorten communication time and improve system efficiency.

LIST

List mode allows users to generate a complex current sequence. Moreover, the mode change can be synchronized with an internal or external signal, to accomplish dynamic and precise test which can save cost for users. Users can edit step value, pulse width and slope sequence and meet a complex test request. A list file includes following parameters: file name step counts (range 2-84), time width of single step (0.00005s-3600s), step value and slope. The edited list file

can be recalled easily. The DC load provides 7 nonvolatile registers to save list files setting for recall later. In the list mode, the load starts to run the list file once receiving a trigger signal, continue to run until end of the operation or receiving another trigger.

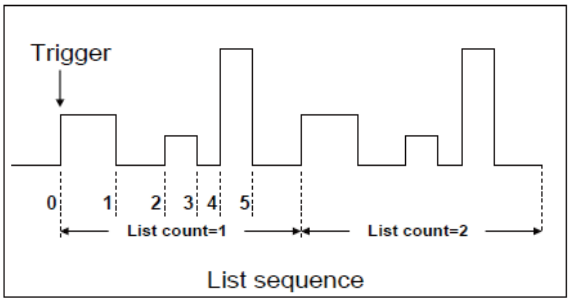

I Monitor and Measure

To make it easy to monitor the actual current waveform during the test, there is an I-monitor monitoring terminal on the rear panel of IT8500G+. With just an oscilloscope, no need to use expensive current probes, you can monitor the current waveforms. Through the I-Monitor terminal, the electronic load converts the 0-100% full-range current into an analog signal of 0-10V, which can be connected to the oscilloscope to display the real-time current waveform.

In addition, IT8500G+ also provides Measure function. It can quickly measure the voltage rise/fall time of the DUT's power modules. You only need to pre-program the start and end voltages. The measurement time of IT8500G+ is almost as good as that of an oscilloscope.

Dimension

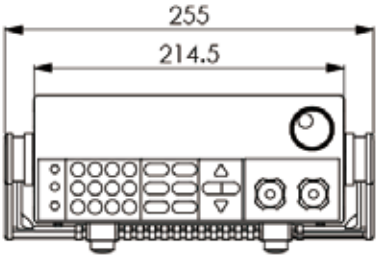

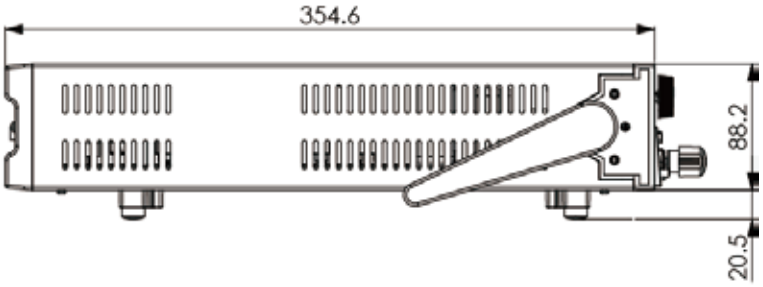

Specification

	Parameter	IT8511G+	
Rated (0 ℃-40 ℃)	Input Voltage	0~150V	
	Input Current	0~3A	0~30A
	Input Power	150W	
	Mov	0.12V/3A	1.2V/30A
CV mode	Range	0.1~18V	0.1~150V
	Resolution	1mV	10mV
	Accuracy	±(0.05%+0.02%FS)	±(0.05%+0.025%FS)
CC mode	Range	0~3A	0~30A
	Resolution	0.1mA	1mA
	Accuracy	±(0.05%+0.05%FS)	±(0.05%+0.05%FS)
CR mode*1	Range	0.05Ω~10Ω	10Ω~7.5KΩ
	Resolution	16bit	
	Accuracy	0.01%+0.08S *2	0.01%+0.0008S
CP mode*3	Range	150W	
	Resolution	10mW	
	Accuracy	0.1%+0.2%FS	
Dynamic mode			
		CC mode	
	T1＆T2	20uS~3600S /Res:1 uS	
	Accuracy	2uS±100ppm	
	Up/down slope*4	0.0001~0.2A/uS	0.001~1.5A/uS
	Up/down slope*5	10uS	10uS
Measuring range			
Voltage Readback	Range	0~18V	0~150V
	Resolution	0.1 mV	1 mV
	Accuracy	±(0.025%+0.025%FS)	±(0.025%+0.025%FS)
Current Readback	Range	0~3A	0~30A
	Resolution	0.1mA	1mA
	Accuracy	±(0.05%+0.05%FS)	
Power Readback	Range	150W	
	Resolution	10mW	
	Accuracy	±(0.1%+0.2%FS)	
Protected range			
OPP		≒160W	
OCP		≒3.3A	≒33A
OVP		≒155V	
OTP		≒85 ℃	
Specifications			
Short circuit	Current（CC）	≒3.3/3A	≒33/30A
	Voltage（CV）	≒0V	≒0V
	Power（CR）	≒40mΩ	≒40mΩ
Input terminal impedance		≒250kΩ	
Dimension		214.5mmW*88.2mmH*354.6mmD	

*This information is subject to change without notice

*1 Voltage/current input value is not less than 10% FS (FS is full range)

*2 Range of resistance readback value: (1/(1/R+(1/R)*0.01%+0.08),1/(1/R-(1/R)*0.01%-0.08))

*3 Voltage/current input value is not less than 10%FS

*4 Rise/fall slope: 10%~90% current rise slope from 0 to maximum current

*5 Minimum rise time: 10%~90% current rise time

Your Power Testing Solution

IT8500G+ series Programmable DC Electronic Load

Specification

	Parameter	IT8512G+	
Rated (0 ℃-40 ℃)	Input Voltage	0~150V	
	Input Current	0~3A	0~30A
	Input Power	300W	
	Mov	0.12V/3A	1.2V/30A
CV mode	Range	0~18V	0~150V
	Resolution	1mV	10mV
	Accuracy	±(0.05%+0.02%FS)	±(0.05%+0.025%FS)
CC mode	Range	0~3A	0~30A
	Resolution	0.1mA	1mA
	Accuracy	±(0.05%+0.05%FS)	±(0.05%+0.05%FS)
CR mode*1	Range	0.05Ω~10Ω	10Ω~7.5KΩ
	Resolution	16bit	
	Accuracy	0.01%+0.08S *2	0.01%+0.0008S
CP mode*3	Range	300W	
	Resolution	0.01W	
	Accuracy	0.1%+0.2%FS	
Dynamic mode			
Dynamic mode*4		CC mode	
	T1＆T2	20uS~3600S /Res:1us	
	Accuracy	2uS±100ppm	
	Up/down slope	0.0001~0.2A/uS	0.001~1.5A/uS
	Up/down slope	10uS	10uS
Measuring range			
Voltage Readback	Range	0~18V	0~150V
	Resolution	0.1mV	1mV
	Accuracy	±(0.025%+0.025%FS)	±(0.025%+0.025%FS)
Current Readback	Range	0~3A	0~30A
	Resolution	0.1mA	1mA
	Accuracy	±(0.05%+0.05%FS)	±(0.05%+0.05%FS)
Power Readback*2	Range	300W	
	Resolution	0.01W	
	Accuracy	±(0.1%+0.2%FS)	
Protected range			
OPP		≒320W	
OCP		≒3.3A	≒33A
OVP		≒160V	
OTP		≒85 ℃	
Specifications			
Short circuit	Current（CC）	≒3.3A	≒33A
	Voltage（CV）	≒0V	≒0V
	Power（CR）	≒40mΩ	≒40mΩ
Input terminal impedance		≒ 250KΩ	
Dimension		214.5mmW*88.2mmH*354.6mmD	

*This information is subject to change without notice

*1 Voltage/current input value is not less than 10% FS (FS is full range)

*2 Range of resistance readback value: (1/(1/R+(1/R)*0.01%+0.08),1/(1/R-(1/R)*0.01%-0.08))

*3 Voltage/current input value is not less than 10%FS

*4 Loading current is not less than 4%FS_CCH

Rise/fall slope: 10%~90% current rise slope from 0 to maximum current

Minimum rise time: 10%~90% current rise time

Specification

	Parameter	IT8512BG+	
Rated (0 ℃-40 ℃)	Input Voltage	0~600V	
	Input Current	0~3A	0~15A
	Input Power	300W	
	Mov	0.6V/3A	3V/15A
CV mode	Range	0~60V	0~600V
	Resolution	1mV	10mV
	Accuracy	±(0.05%+0.02%FS)	±(0.05%+0.025%FS)
CC mode	Range	0~3A	0~15A
	Resolution	0.1mA	1mA
	Accuracy	±(0.05%+0.05%FS)	±(0.05%+0.05%FS)
CR mode*1	Range	0.05Ω~10Ω	10Ω~7.5KΩ
	Resolution	16bit	
	Accuracy	0.01%+0.08S *2	0.01%+0.0008S
CP mode*3	Range	300W	
	Resolution	0.01W	
	Accuracy	0.1%+0.2%FS	
Dynamic mode			
Dynamic mode*4		CC mode	
	T1＆T2	20uS~3600S /Res:1us	
	Accuracy	2uS±100ppm	
	Up/down slope	0.0001~0.2A/uS	0.001~0.8A/uS
	Up/down slope	10uS	10uS
Measuring range			
Voltage Readback	Range	0~60V	0~600V
	Resolution	1mV	10mV
	Accuracy	±(0.025%+0.025%FS)	±(0.025%+0.025%FS)
Current Readback	Range	0~3A	0~15A
	Resolution	0.1mA	1mA
	Accuracy	±(0.05%+0.05%FS)	±(0.05%+0.05%FS)
Power Readback*2	Range	300W	
	Resolution	0.01W	
	Accuracy	±(0.1%+0.2%FS)	
Protected range			
OPP		≒320W	
OCP		≒3.3A	≒16A
OVP		≒630V	
OTP		≒85 ℃	
Specifications			
Short circuit	Current（CC）	≒3.3A	≒16A
	Voltage（CV）	≒0V	≒0V
	Power（CR）	≒188mΩ	≒188mΩ
Input terminal impedance		≒ 800KΩ	
Dimension		214.5mmW*88.2mmH*354.6mmD	

*This information is subject to change without notice

*1 Voltage/current input value is not less than 10% FS (FS is full range)

*2 Range of resistance readback value: (1/(1/R+(1/R)*0.01%+0.08),1/(1/R-(1/R)*0.01%-0.08))

*3 Voltage/current input value is not less than 10%FS

*4 Loading current is not less than 4%FS_CCH

Rise/fall slope: 10%~90% current rise slope from 0 to maximum current

Minimum rise time: 10%~90% current rise time

Your Power Testing Solution

IT8500G+ series Programmable DC Electronic Load

Specification

	Parameter	IT8513G+	
Rated (0 ℃-40 ℃)	Input Voltage	0~150V	
	Input Current	0~12A	0~120A
	Input Power	600W	
	Mov	0.2V/12A	2V/120A
CV mode	Range	0~18V	0~150V
	Resolution	1mV	10mV
	Accuracy	±(0.05%+0.02%FS)	±(0.05%+0.025%FS)
CC mode	Range	0~12A	0~120A
	Resolution	1mA	10mA
	Accuracy	±(0.05%+0.05%FS)	±(0.05%+0.05%FS)
CR mode*1	Range	0.05Ω~10Ω	10Ω~7.5KΩ
	Resolution	16bit	
	Accuracy	0.01%+0.08S *2	0.01%+0.0008S
CP mode*3	Range	600W	
	Resolution	0.01W	
	Accuracy	0.2%+0.2%FS	
Dynamic mode			
Dynamic mode*4		CC mode	
	T1＆T2	20uS~3600S /Res:1us	
	Accuracy	2uS±100ppm	
	Up/down slope	0.001~0.2A/uS	0.01~1.6A/uS
	Up/down slope	10uS	10uS
Measuring range			
Voltage Readback	Range	0~18V	0~150V
	Resolution	0.1mV	1mV
	Accuracy	±(0.025%+0.025%FS)	±(0.025%+0.025%FS)
Current Readback	Range	0~12A	0~120A
	Resolution	1mA	10mA
	Accuracy	±(0.05%+0.05%FS)	±(0.05%+0.05%FS)
Power Readback*2	Range	600W	
	Resolution	0.01W	
	Accuracy	±(0.2%+0.2%FS)	
Protected range			
OPP		≒620W	
OCP		≒13A	≒130A
OVP		≒160V	
OTP		≒85°C	
Specifications			
Short circuit	Current（CC）	≒13A	≒130A
	Voltage（CV）	≒0V	≒0V
	Power（CR）	≒15mΩ	≒15mΩ
Input terminal impedance		≒ 250KΩ	
Dimension		214.5mmW*88.2mmH*354.6mmD	

*This information is subject to change without notice

*1 Voltage/current input value is not less than 10% FS (FS is full range)

*2 Range of resistance readback value: (1/(1/R+(1/R)*0.01%+0.08),1/(1/R-(1/R)*0.01%-0.08))

*3 Voltage/current input value is not less than 10%FS

*4 Loading current is not less than 4%FS_CCH

Rise/fall slope: 10%~90% current rise slope from 0 to maximum current

Minimum rise time: 10%~90% current rise time

Specification

	Parameter	IT8513BG+		IT8513CG+	
Rated (0 ℃-40 ℃)	Input Voltage	0~600V		0~40V	
	Input Current	0~3A	0~20A	0~20A	0~200A
	Input Power	600W		600W	
	Mov	0.4V/3A	2.4V/20A	0.06V/20A	0.6V/200A
CV mode	Range	0~60V	0~600V	0~4V	0~40V
	Resolution	1mV	10mV	0.1mV	1mV
	Accuracy	±(0.05%+0.02%FS)	±(0.05%+0.025%FS)	±(0.05%+0.1%FS)	±(0.05%+0.15%FS)
CC mode	Range	0~3A	0~20A	0~20A	0~200A
	Resolution	0.1mA	1mA	1mA	10mA
	Accuracy	±(0.05%+0.05%FS)	±(0.05%+0.05%FS)	±(0.1%+0.1%FS)	±(0.1%+0.15%FS)
CR mode*1	Range	0.05Ω~10Ω	10Ω~7.5KΩ	0.01Ω~10Ω	10Ω~200Ω
	Resolution	16bit		16bit	
	Accuracy	0.01%+0.08S *2	0.01%+0.0008S	0.01%+0.08S *2	0.01%+0.0008S
CP mode*3	Range	600W		600W	
	Resolution	0.01W		0.01W	
	Accuracy	0.2%+0.2%FS		0.2%+0.5%FS	
Dynamic mode					
Dynamic mode*4		CC 模式		CC 模式	
	T1＆T2	20uS~3600S /Res:1us		20uS~3600S /Res:1us	
	Accuracy	2uS±100ppm		2uS±100ppm	
	Up/down slope	0.0001~0.2A/uS	0.001~0.8A/uS	0.001~0.2A/us	0.01~1A/us
	Up/down slope	10uS	10uS	10uS	10uS
Measuring range					
Voltage Readback	Range	0~60V	0~600V	0~4V	0~40V
	Resolution	1mV	10mV	0.1mV	1mV
	Accuracy	±(0.025%+0.025%FS)	±(0.025%+0.025%FS)	±(0.025%+0.1%FS)	±(0.025%+0.1%FS)
Current Readback	Range	0~3A	0~20A	0~20A	0~200A
	Resolution	0.1mA	1mA	1mA	10mA
	Accuracy	±(0.05%+0.05%FS)	±(0.05%+0.05%FS)	±(0.1%+0.1%FS)	±(0.1%+0.1%FS)
Power Readback*2	Range	600W		600W	
	Resolution	0.01W		0.01W	
	Accuracy	±(0.2%+0.2%FS)		±(0.2%+0.5%FS)	
Protected range					
OPP		≒620W		≒620W	
OCP		≒3.3A	≒21A	≒21A	≒210A
OVP		≒630V		≒44V	
OTP		≒85°C		≒85°C	
Specifications					
Short circuit	Current（CC）	≒3.3A	≒21A	≒21A	≒210A
	Voltage（CV）	≒0V	≒0V	≒0V	≒0V
	Power（CR）	≒120mΩ	≒120mΩ	≒3mΩ	≒3mΩ
Input terminal impedance		≒ 800KΩ		≒ 90KΩ	
Dimension		214.5mmW*88.2mmH*354.6mmD		214.5mmW*88.2mmH*354.6mmD	

*This information is subject to change without notice

*1 Voltage/current input value is not less than 10% FS (FS is full range)

*2 Range of resistance readback value: (1/(1/R+(1/R)*0.01%+0.08),1/(1/R-(1/R)*0.01%-0.08))

*3 Voltage/current input value is not less than 10%FS

*4 Loading current is not less than 4%FS_CCH

Rise/fall slope: 10%~90% current rise slope from 0 to maximum current

Minimum rise time: 10%~90% current rise time

SETUP
ELECTRÓNICA

CENTRAL
C/ Francisco Medina y Mendoza
Polígono 1, Parcela 1, Nave 55
19171 - CABANILLAS DEL CAMPO (Guadalajara)
Tel. 949 32 9337

setup@setup-electronica.es
www.setup-electronica.es

BARCELONA
C/ Las Gracias, 11 (LA FLORESTA)
08198 –SANT CUGAT DEL VALLÈS
(Barcelona)
Tel. 93 4140372

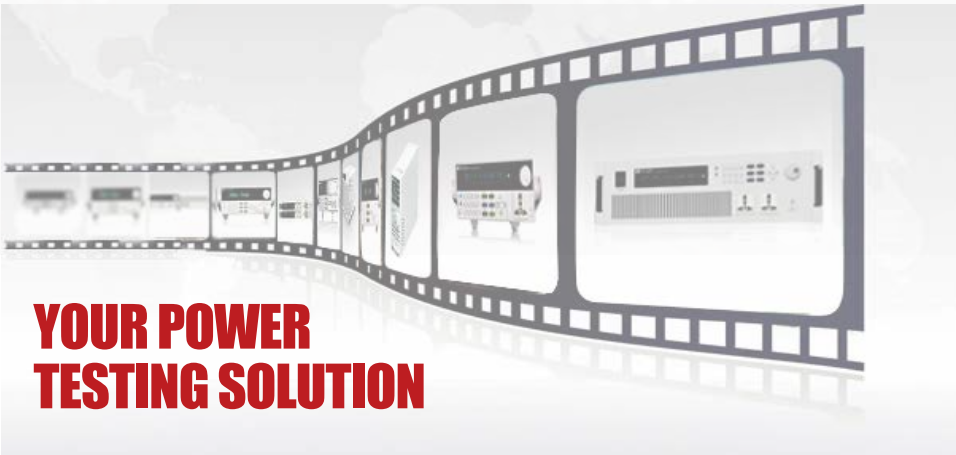

This information is subject to change without notice.For more information, please contact ITECH.

Taipei

Add: No.918, Zhongzheng Rd., Zhonghe Dist., New Taipei City
235, Taiwan
Web: www.itechate.com
TEL: +886-3-6684333
E-mail: info@itechate.com

ITECH Web

ITECH Facebook

ITECH LinkedIn